APPROVAL SHEET

FOR

SPEAKER

GUANGZHOU YUENENG TECHNOLOGY CO., LTD.

CUSTOMER:

MODEL NO.: YN3020-0402WD85

OUR PART NO..:

CUSTOMER PART NO.:

CUSTOMER	APPROVED	CHECKED

Add: ,132 Shishu Road, Yuexiu District, Guangzhou City, Guangdong China.

Mobile:+86-18924165988 WhatsApp: +86-18924165988

skype:18924165988 Email: cngzyn@163.com

1. SCOPE

THIS SPECIFICATION IS APPLIED TO THE DYNAMIC RECEIVER/SPEAKER WHICH IS USED IN CELLULAR PORTABLE PRODUCT.

2. GENERAL SPECIFICATIONS

ANALYSIS ITEMS	SPECIFICATIONS
1. TYPE	Dynamic speaker
2. OUT SIDE SIZE	30*20*7.5mm , Shown Fig.3
3. IMPEDANCE	4Ω ±15% at 1 KHz 0.89Vms Sine Wave
4. RESONANCE FREQUENCY	1500±20% Hz at 0.89V Sine wave
5. SENSITIVITY (S.P.L.)	100dB ±3dB at 2w/ 0.1m / 2kHz average
6. RATED / MAX. POWER	2W / 2.5W
7. FREQUENCY RANGE	Fo ~ 20kHz
8. DISTORTION	Less than 10%
9. UNIT WEIGHT	6g
10. MEASURING DIAGRAM	Shown in Fig.1
11. FREQUENCY RESPONSE	Shown in Fig.2
12. OPERATING TEMPERATURE	- 30℃ ～ +70℃
13. STORAGE TEMPERATURE	- 40℃ ～ +85℃
14. OPERATION TEST	No one should perceive noise of sine wave 2.0V of 0.2kHz ~ 10kHz .

NO.	DATE	DUE TO	REVISION	SIGNATURE

3. ENVIRONMENTAL CHARACTERISTICS

RESULTS OF AFTER TEST	Sensitivity difference shall be within (3dB) and should satisfy the test described under item 14 after each following test.
1. APPEARANCE	Should not exist any obstacle to be harmful to normal operation : damages \ cracks \ rusts and distortions etc.
3. POLARITY	When positive voltage is applied to the terminal marked (+), diaphragm should move to the front.
4. LOAD TEST	2W white noise is applied for 96 hours and satisfy the test listed on item 05,08,14.
5. HIGH TEMPERATURE DURABILITY	After having been in a test chamber for 48hours at the condition of +80℃ ±5℃ and then let 2 hours in a room .
6. COLD TEMPERATURE DURABILITY	After having been in a test chamber for 48 hours at the condition of -40℃ ±5℃ and then let 2 hours in a room .
7. HUMIDITY DURABILITY	After having been in a test chamber for 48hours at the condition of +40℃±5℃ 90%~96% RH and then let 2 hours in a room .
8.TEMPERATURE CYCLE DURABILITY	Low temperature -40 ℃ ±2℃ (2 hour) / high temperature +85±2℃ (2 hour) : 1 cycle , total 10 cycles and then let 2 hours in a room .
9.VIBRATION DURABILITY	Frequency Range:10Hz ~ 500Hz Amplitude : 0.35mm or acceleration : 50m/s^2 Duration : 2h per axis=10 cycles ; 3 axis
10.DROP TEST	The speaker unit shall stand 10 random drops from a height of 1 meter to a concrete floor faced with 5m/m thick hard wood board and be nothing mechanical damage.
11.PACKING STRENGTH	As per packing condition, from height of 1 meter, the unit is to be dropped 1 time each in three planes on concrete floor.

NO.	DATE	DUE TO	REVISION	SIGNATURE

4.STANDARD TEST CONDITION OF SPEAKER (Fig.1)

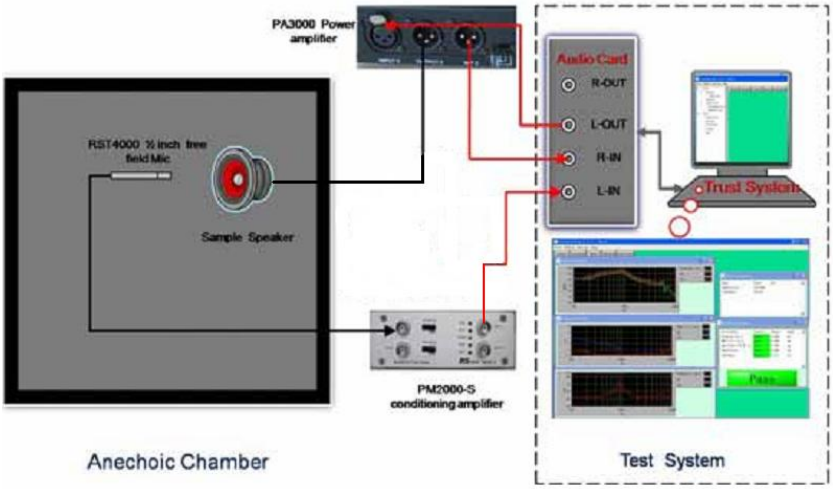

EAKER MODE) (Fig.2)

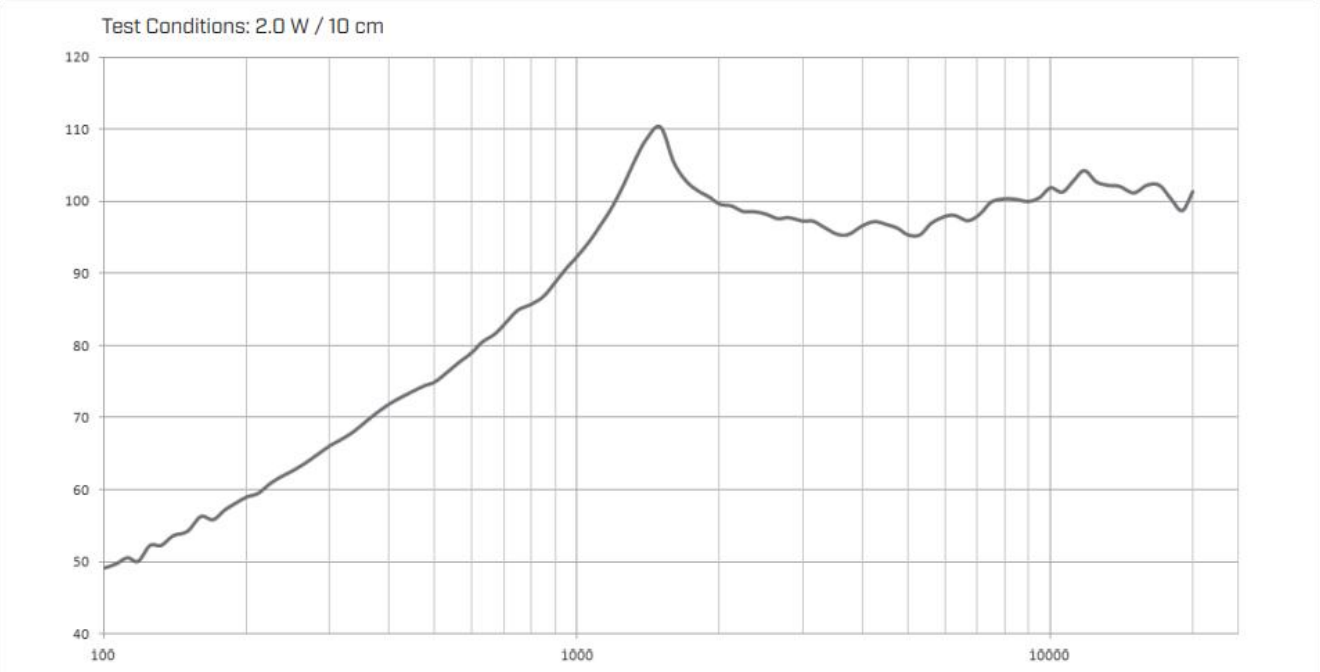

NO.	DATE	DUE TO	REVISION	SIGNATURE

4.ASSEMBLY DIMENSIONS (Fig.3)

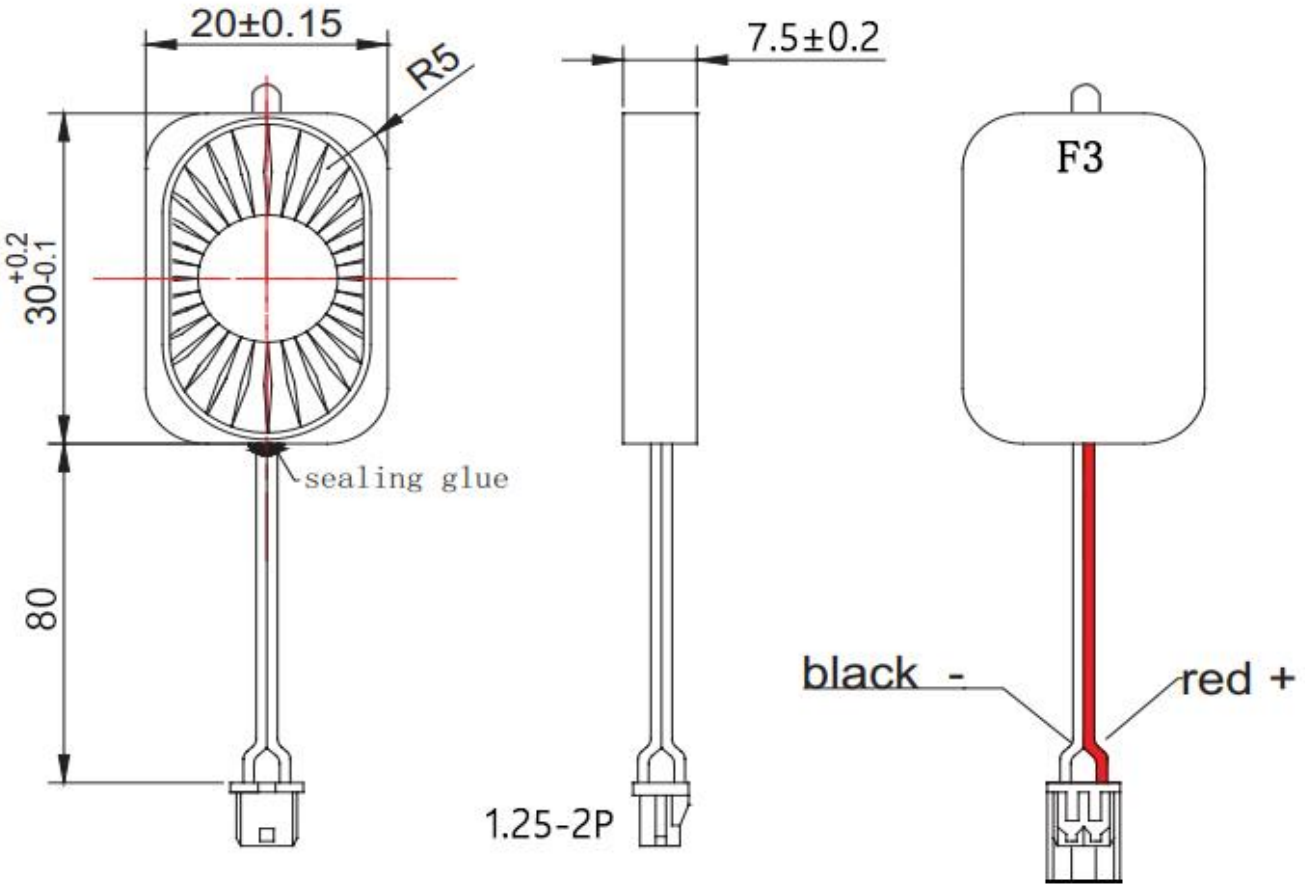

NO.	DATE	DUE TO	REVISION	SIGNATURE

4.PACKING (Fig.4)

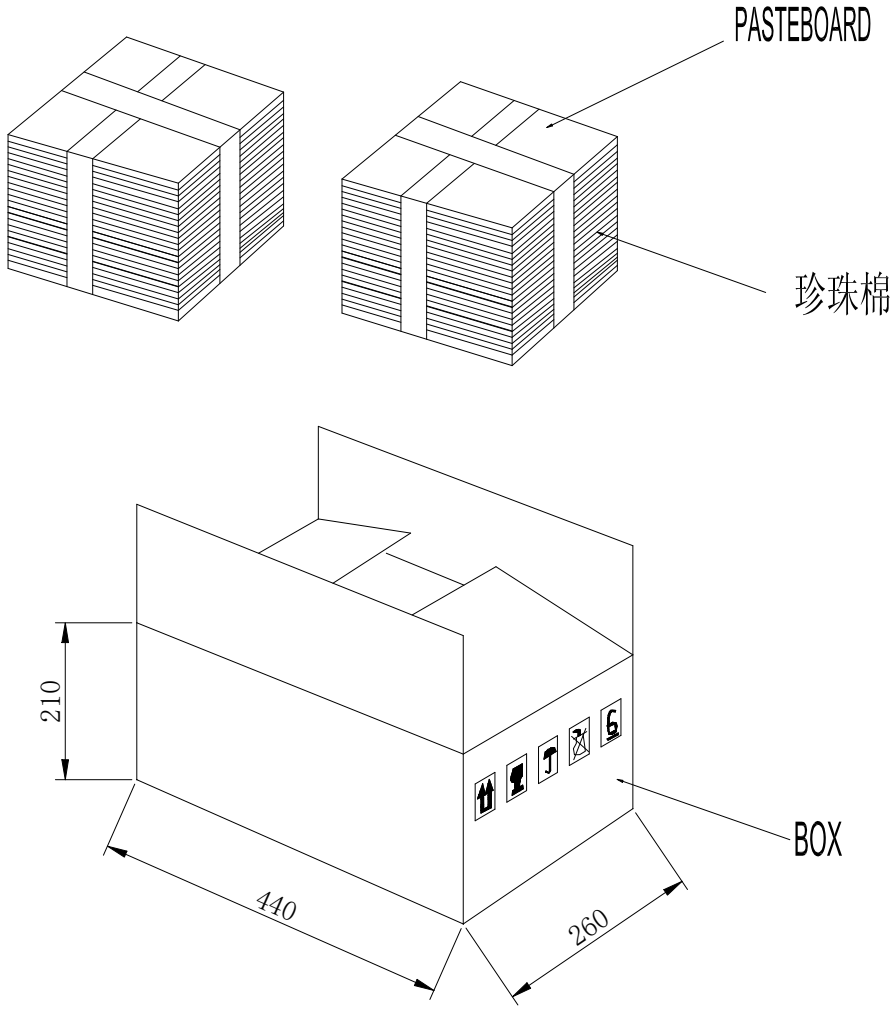

IT:MM

NOTES:

1. 100 PCS PER TRAY PE PAN.
2. 2000 PCS PER CARTONS.
3. 2 CARTONS PER BOX.
4. 2000 PCS PER BOX.

NO.	DATE	DUE TO	REVISION	SIGNATURE