YNKJ

BUZZER SPECIFICATION

广州粤能科技有限公司

GUANGZHOU YUENENG TECHNOLOGY CO., LTD.

CUSTOMER:

MODEL NO.: YN-DCW9042-16-2703P-4

OUR PART NO..:

CUSTOMER PART NO.:

CUSTOMER	APPROVED	CHECKED

Add: ,132 Shishu Road, Yuexiu District, Guangzhou City, Guangdong China.

Mobile:+86-18924165988 WhatsApp: +86-18924165988

skype:18924165988 Email: cngzyn@163.com

1. Technical Parameter

Measuring condition

Part shall be measured under a condition (Temperature: 5 ～ 35℃, Humidity: 45% ～ 85%R.H., Atmospheric pressure: 860 ～ 1060hPa) unless the standard condition (Temperature: 25±3℃, Humidity: 60±10%R.H. Atmospheric pressure: 860 ～1060hPa) is regulated to measure.

1	Rated Voltage	3Vo-p
2	Operating Voltage	2~4Vo-p
3	Rated Current	Max.60mA ,at 2700Hz 50% duty Square Wave 3Vo-p
4	Sound Output at 10cm	Min. 85dB,at 2700Hz 50% duty Square Wave 3Vo-p
5	Coil Resistance	16±4Ω
6	Resonant Frequency	2700Hz±300(Internal parameters, which can be ignored by users)
7	Operating Temperature	-20℃～+60℃
8	Store Temperature	-30℃～+70℃
9	Net Weight	Approx 1.0g
10	Tone Nature	Constant
11	Dimension	Φ9 x H4.2 mm
12	R o H S	Yes

2. Dimensions

Unit: mm

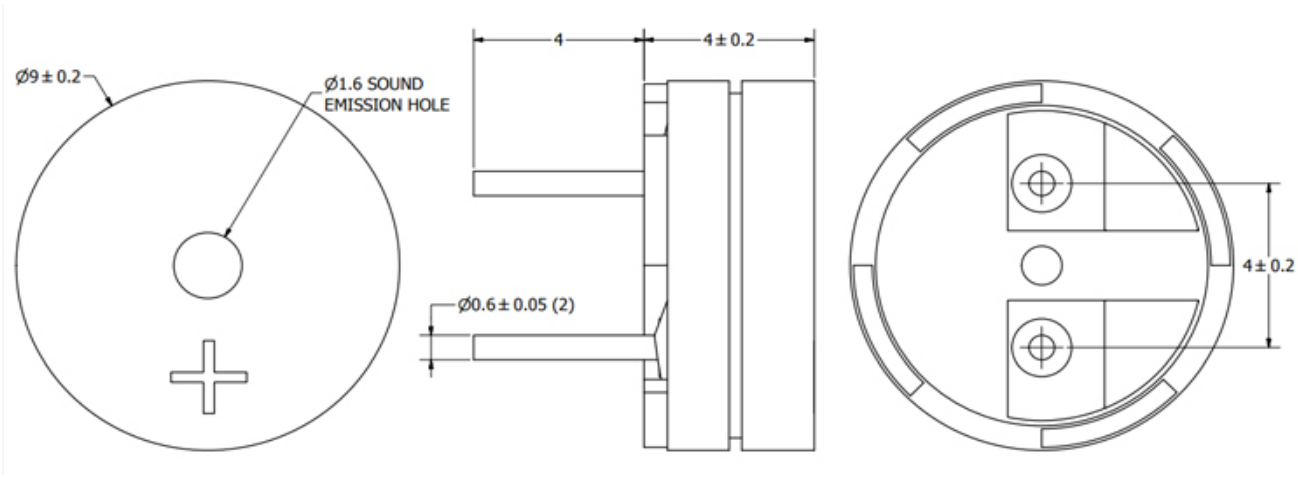

*Unit: mm; Tolerance: ±0.3mm Except Specified

*Housing Material: Black LCP

*Terminal plate: 3 soldering pads, tin Plating Brass

3. Electrical And Acoustical Measuring Condition

Recommended Driving Circuit

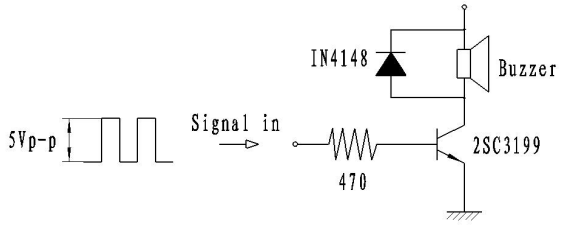

Resonant frequency, 1/2 duty cycle. Square wave.

Signal amplitude should be large enough to saturate the transistor.

Recommended Setting

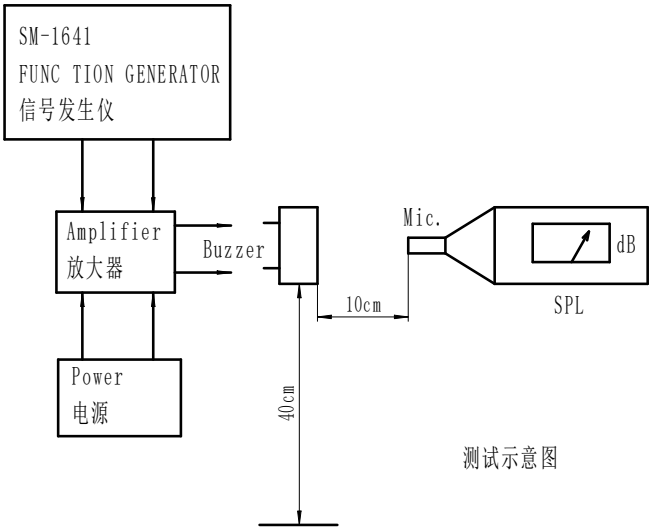

4. Frequency Response

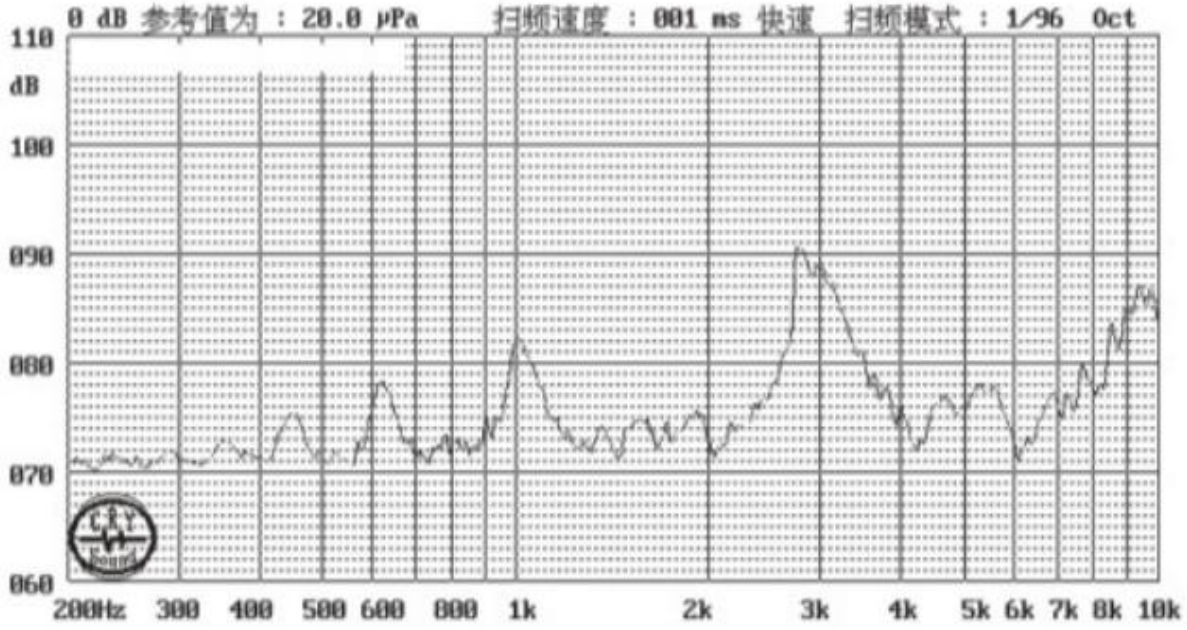

5. Surface mounting condition

5.1 Reflow soldering

Recommendable reflow soldering condition is as follows.

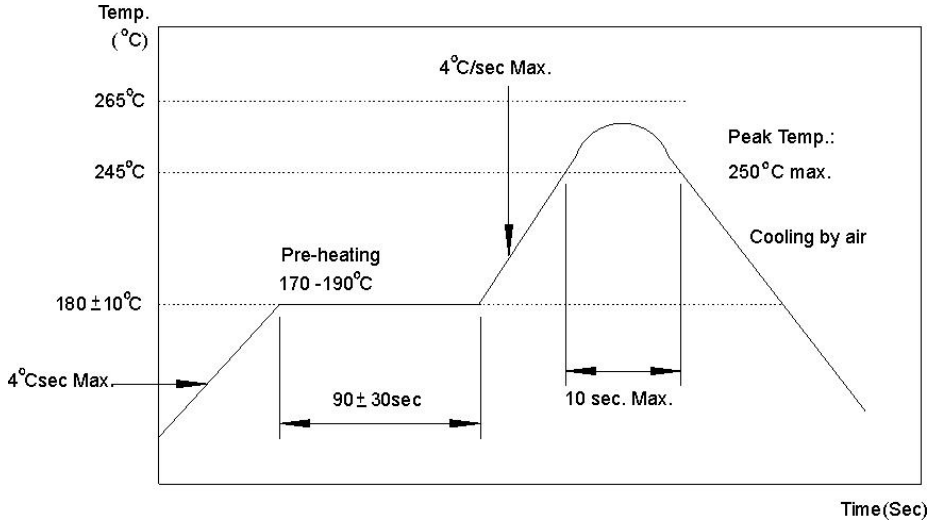

Note: (1) In automated mounting of the SMD sound transducers on PCB, any bending, expanding and pulling forces or shocks against the SMD sound transducers shall be kept minimum to prevent them from electrical failures and mechanical damages of the devices.

(2) In the reflow soldering, too high soldering temperatures and too large temperature Gradient such as rapid heating or cooling may cause electrical failures and mechanical damages of the devices.

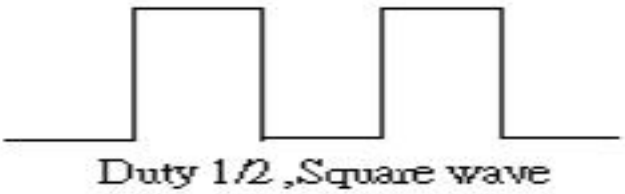

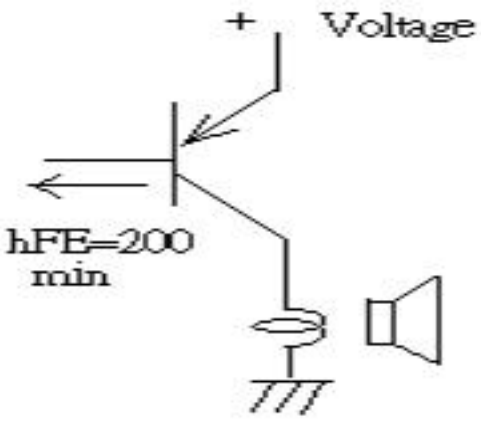

6. Reliability Test

After any following tests the part shall meet specifications without any degradation in appearance and performance except SPL. SPL shall not deviate more than -10 dB from the initial value

6.1 Ordinary Temperature Life Test

The part shall be subjected to 96 hours at 25±10℃. Input rated voltage

Resonant frequency, 1/2 duty Square wave.

6.2 High Temperature Test

The part shall be capable of with standing a storage temperature of +80℃ for 96 hours.

6.3 Low Temperature Test

The part shall be capable of with standing a storage temperature of -30℃ for 96 hours.

6.4 Humidity Test

Temperature:+40℃±3℃ Relative Humidity:90%～95% Duration: 48 hours

and expose to room temperature for 6 hours

6.5 Temperature Shock Test

Temperature:60℃ /1hour→ 25℃/3hours→-20℃/1hour→ 25℃/3hours (1cycle)

Total cycle: 10 cycles

6.6 Drop Test

Standard Packaging From 75cm(Drop on hard wood or board of 5cm thick, three sides, six plain.)

6.7 Vibration Test

Vibration:1000cycles /min. Amplitude:1.5mm, Duration: 1 hour in each 3 axes

6.8 Reflow Test

Use recommendable reflow soldering condition (as shown in 5.1)

(1) No abnormality should be found after reflow

(2) Good soldering to meet soldering requirements

Note:

As this product is not protected from foreign material entering, please make sure that any foreign materials (e.g. magnetic powder, washing solvent, flux, corrosive gas) do not enter this product in your production processes. The functional degradation (e.g. SPL down) may occur if foreign material enter it.